All Dimensions In MM Unless Otherwise Stated

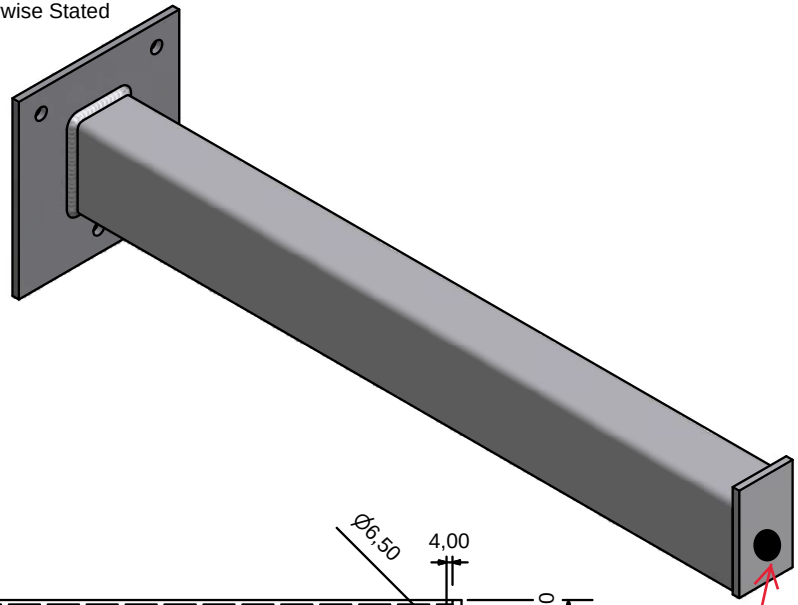

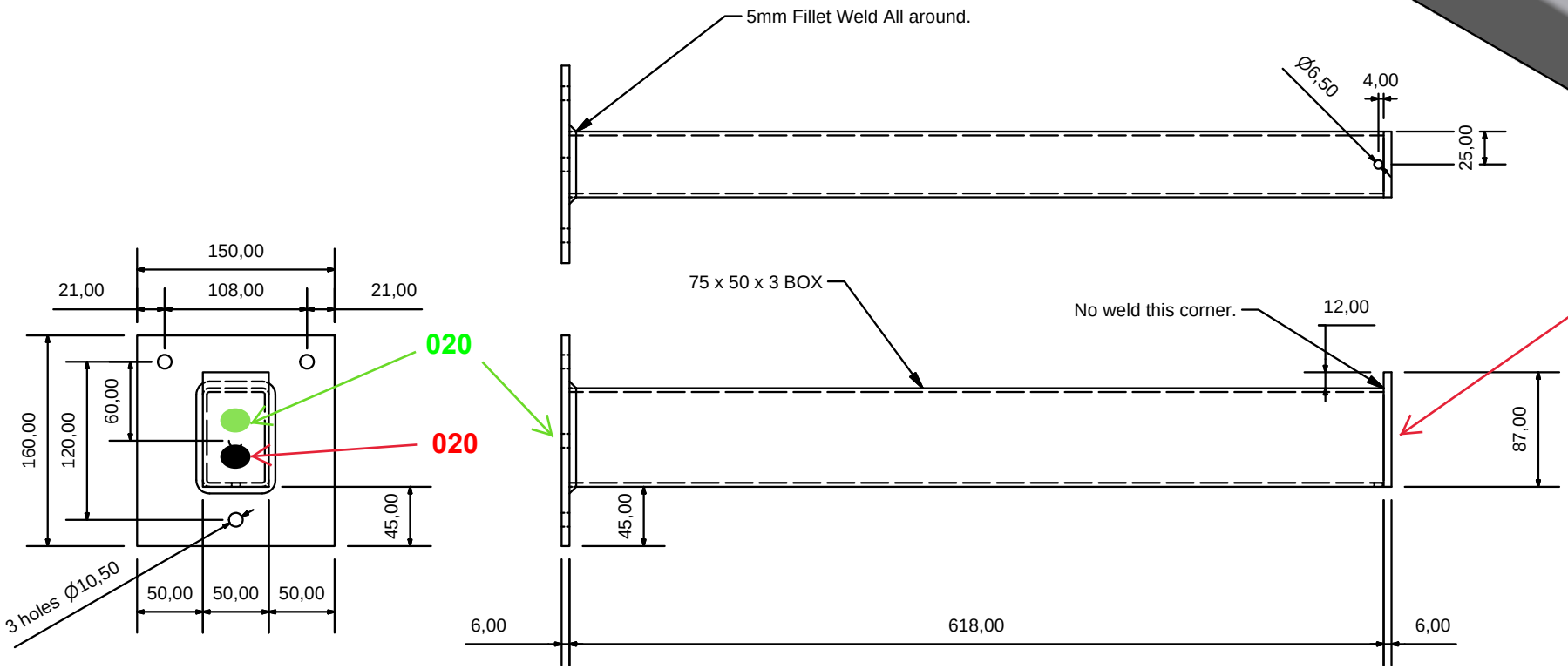

FIRST ANGLE PROJECTION	**Canopy Products Ltd** Paradise Works Paradise Street Ramsbottom Lancashire BL0 9BS TEL : 01706 82 2665 FAX : 01706 82 3333	CANOPYPRODUCTS QUALITY IS OUR TRADITION	Material: Mild Steel Galvanised	Treatment : GALVANISED	Drawn By Peter OReilly	Date 23/01/2017	Scale: 1:1
			Part Description: Steel Support for 700 Projections			Part Number ARM-700	